Water

UNICOcoder® NTEP

Single-jet cold/hot water meter

Your benefits

- Mechanical roller register with 0.1 US gallons resolution:
  Efficient consumption monitoring in energy data management
- Transfer of the effective meter reading:
  No data loss and high quality of billing data
- Register without batteries:
  No service life restriction
- Robust, high grade wear resistant materials:
  Excellent measuring stability and reliability
- Measurement of low flow rates:
  Increased cost effectiveness

Specifications 3/4”

Max flow rate	22 gpm
Nominal flow rate	11 gpm
Min flow rate (+ 1,5/- 5 %)	0.50 gpm
Max working pressure	230 psi
Max working temp	194°F
Nominal pipe size	¾"
Connection on meter	1" NPSM thread
Main case material	Brass
Encoder resolution	1/10gal

Features

- NSF-61-G & 372 certified and marked
- NTEP Approval CC 19-019
- Sealed register for tamper resistance
- Meter with high accuracy and durability
- Encoder Output – serial data interface to wired or wireless transmitting device

Encoder-Technology

The well-established GWFcoder®-system reads the absolute mechanical register value precisely and reliably and provides the data through standardized serial interfaces. The number wheels with three various long, asymmetrically arranged slots are being scanned through light pipes which are connected to five light emitting diodes (LED). Thus, the exact position of each number wheel can be detected and the encoded absolute register read can be transmitted as part of the M-Bus protocol. This functioning principle is patented by GWF. The GWFcoder®-interface provides an incomparably higher level of information compared to meters with pulse output.

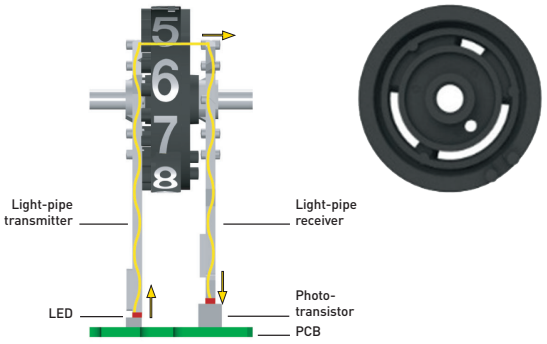

Meter absolut Encoder readout:

Absolute meter reading:	1236542.1 US gallons
Serial number:	43215678
Meter state:	OK
Medium:	Water

Installation

Pipeline: horizontal
vertical up-flow
vertical down-flow

Meter head: facing up or sideways

Dimension Diagram

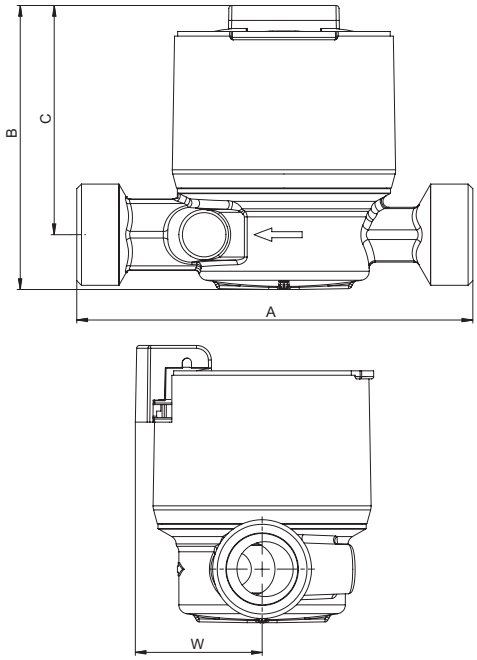

Accuracy chart

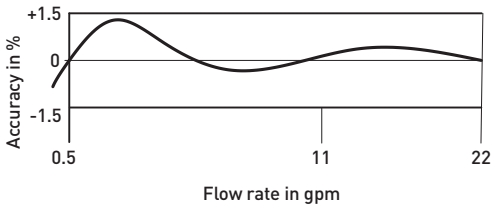

Technical Data

Dimensions and weights			
Length without couplings	A	inch	5.12"
Height	B	inch	3.7"
Height from pipe centre line	C	inch	3.0"
Installation depth from pipe centre line	W	inch	1.7"
Weight without couplings		lbs	1.57

Permissible ambient temperature UNICOcoder® MP	+41°F to +131°F
Current consumption	max. 2 M-Bus Loads
Meter Output Encoder M-Bus	EN 13757-2/-3
Meter Output Encoder SUS	Sensus: UI-1203
Standard transmission speed	2400 baud
Register protection class	IP67 or IP68

Certifications	
NTEP Approval cold/hot 33°F – 156.7°F	CC 19-019A1
NSF-61-G & 372 D-Hot / incl. cold, Type: Unico2coder MP	✓
New York Certificate of Approval	✓

Certified to NSF/ANSI 61-G & 372

Typical Head Loss Curve

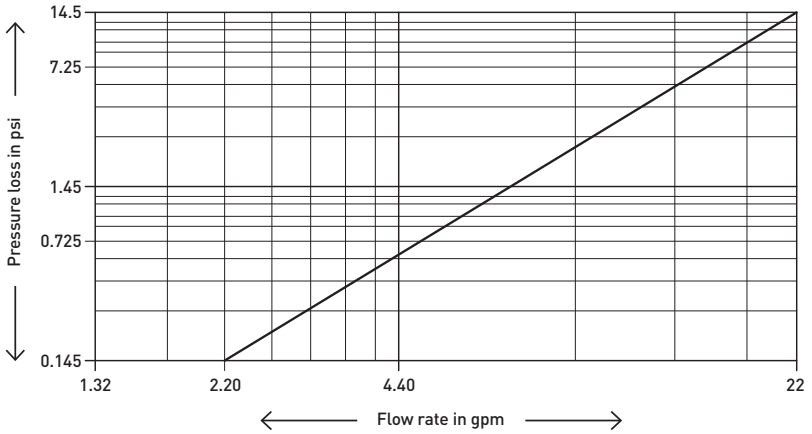

Comparison «absolute meter reading» vs. pulse

GWFcoder® technology:
Transfers the effective meter reading. The read-out value in the billing system and the invoice are the same as the meter reading.

Pulse transfer:
The potential sources of error for a reproduced meter reading with pulse transmission are:

- Bouncing
- Backflow water
- Temporary signal interruption
- Double pulses
- Incorrect pulse value

The readout value in the billing system and the invoice may differ from the meter reading leading to diminished revenue stream.

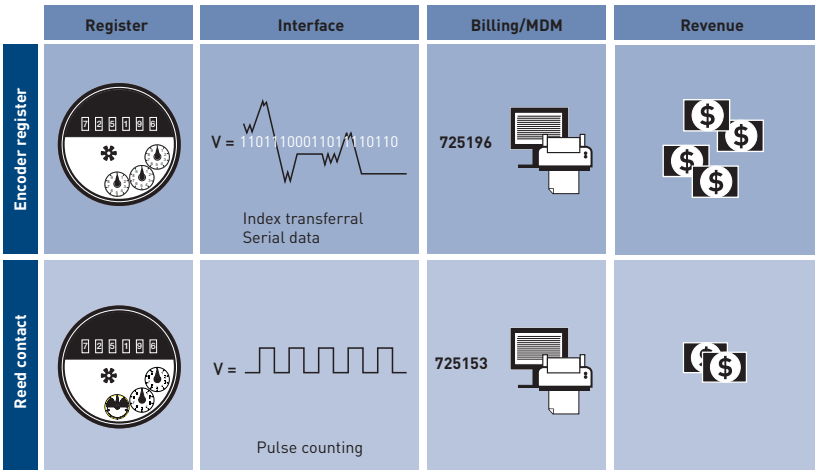

GWF AG
Obergrundstrasse 119
6005 Lucerne, Switzerland
T +41 41 319 50 50
info@gwf.ch, www.gwf.ch
Technical support:
T +41 41 319 52 00, support@gwf.ch

printed in switzerland
Subject to modification, 08.11.2022 – EPe10129